Reference 930180 | A3

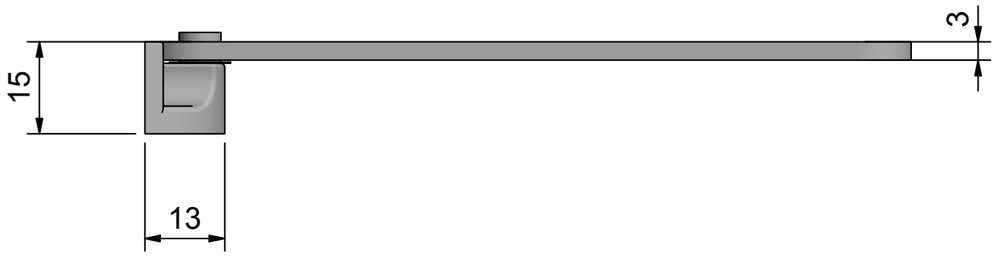

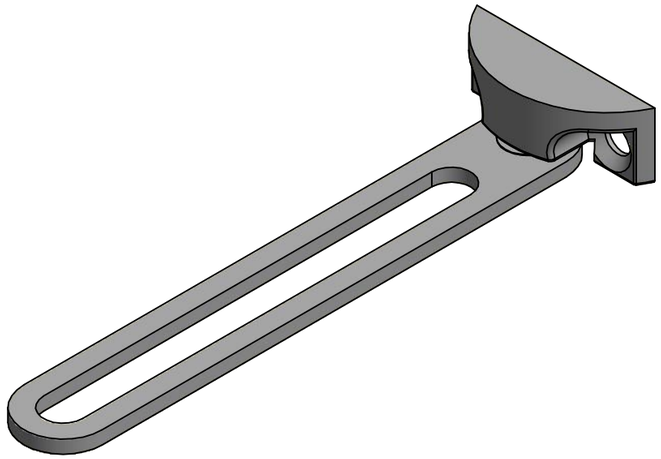

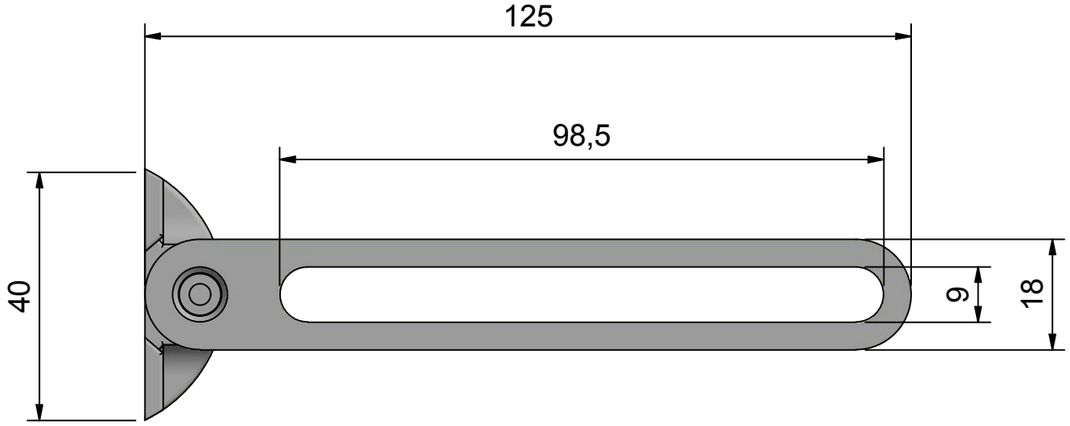

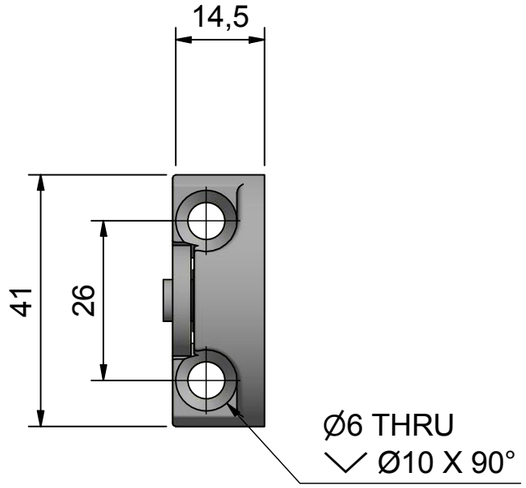

AISI304/Electro polished	Date 191113/HH
Description **Ventilation stay for SLUG 2010**	Item no. **930180**