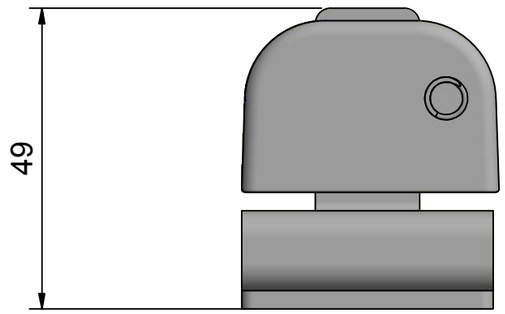

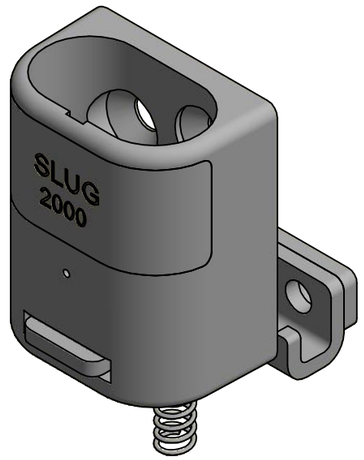

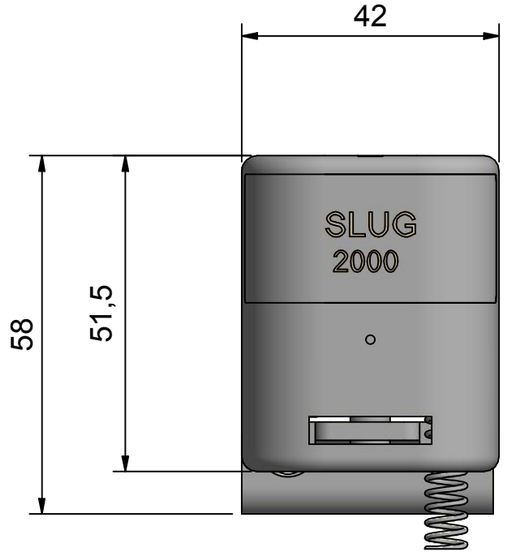

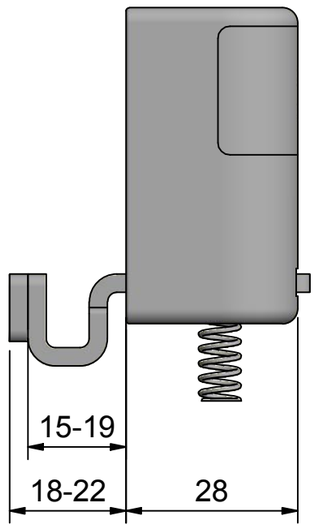

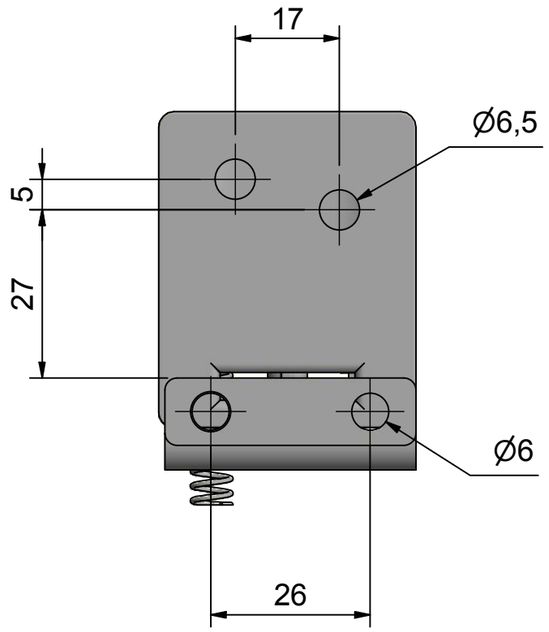

Zamac/Steel/Painted white	Date 191111/HH
Description **Window lock SLUG 2010**	Item no. **929200**