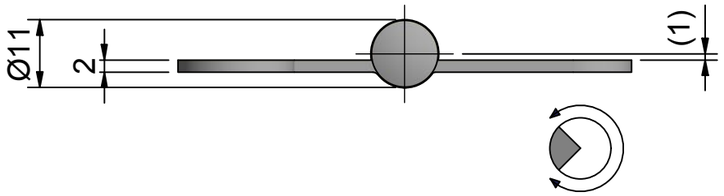

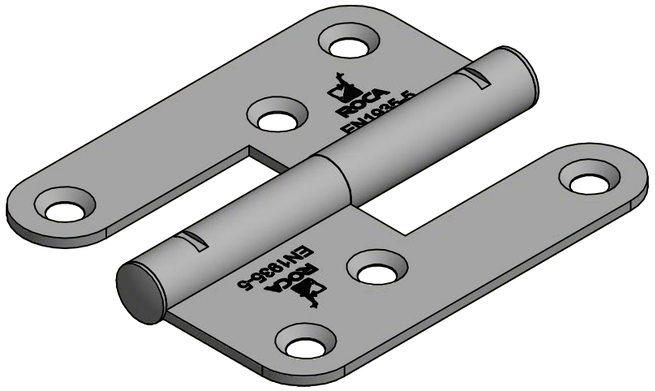

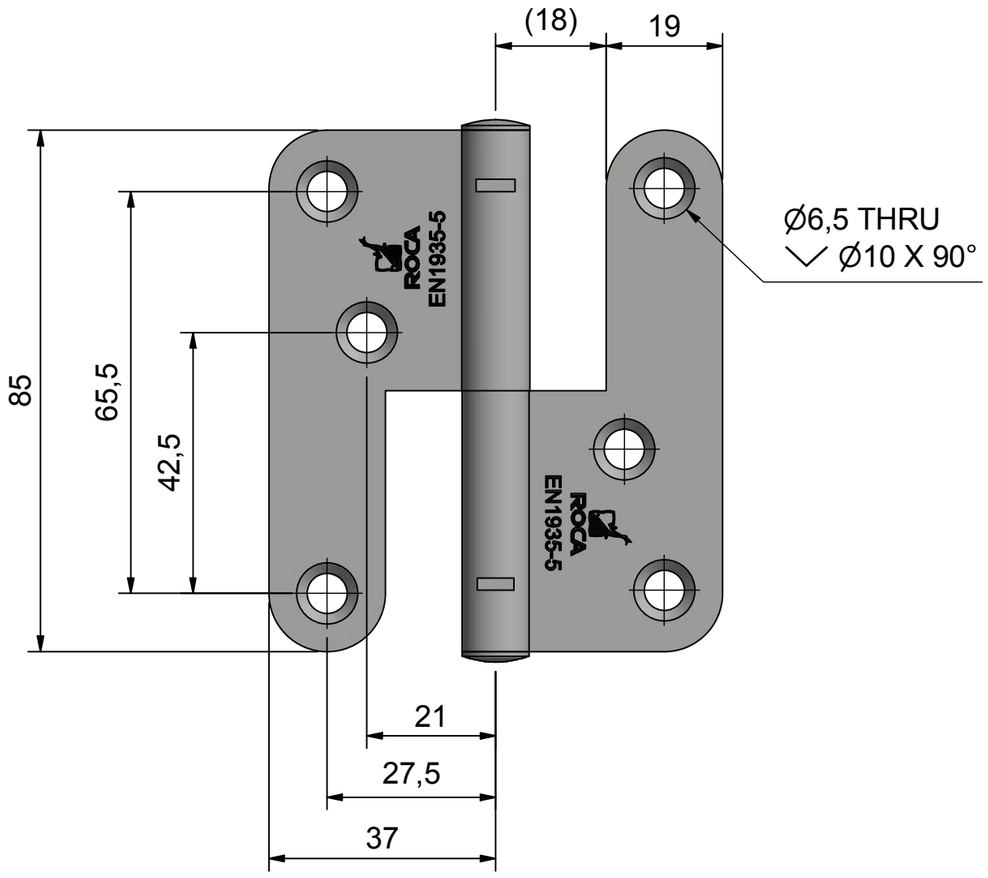

AISI316/Electro polished

Date 191104/HH

Description **Lift off hinge | 1222 left handed**

Item no. **905326**