Referense 481920 | A3

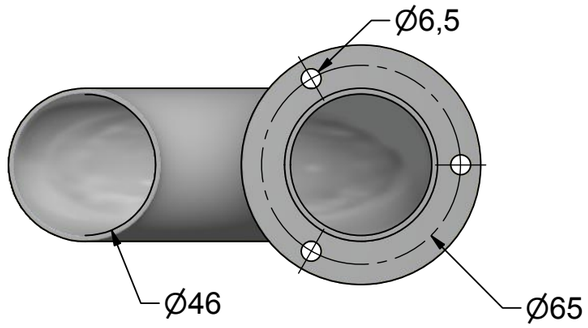

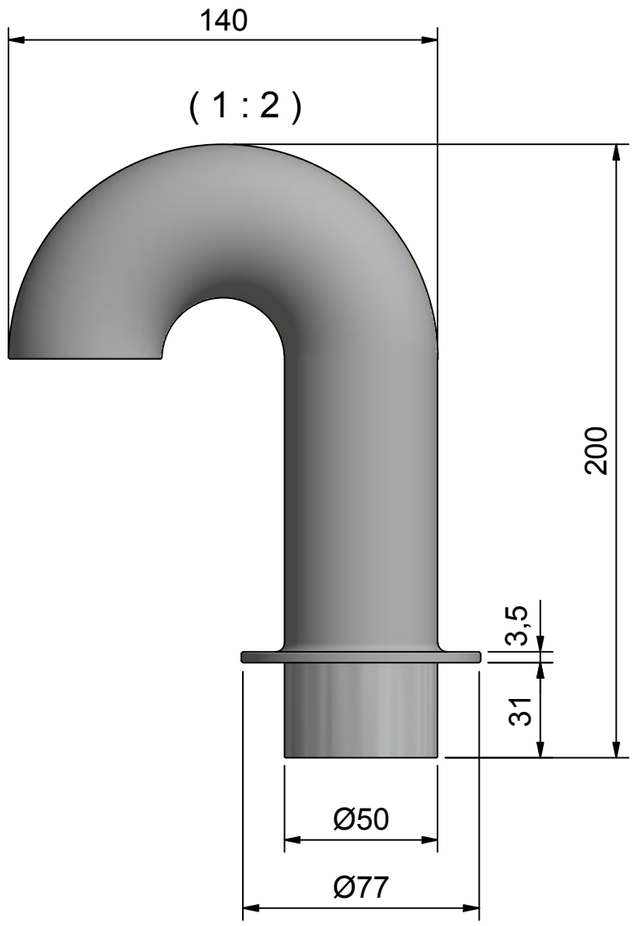

AISI316/polished	Date 191002/HH
Description **Cable outlet, Ø50mm**	Item no. **481920**