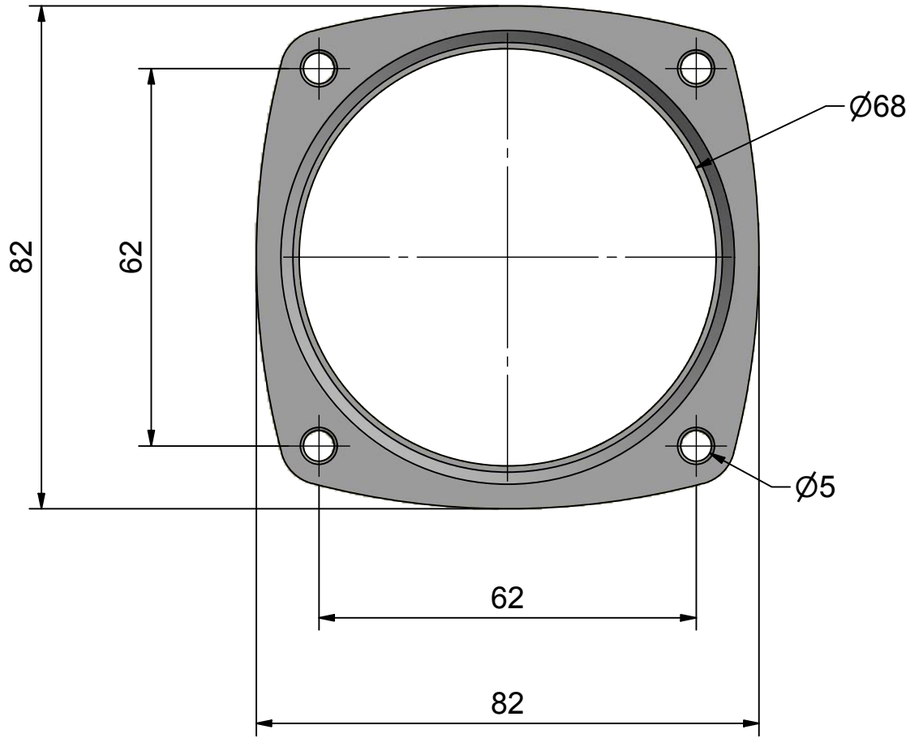

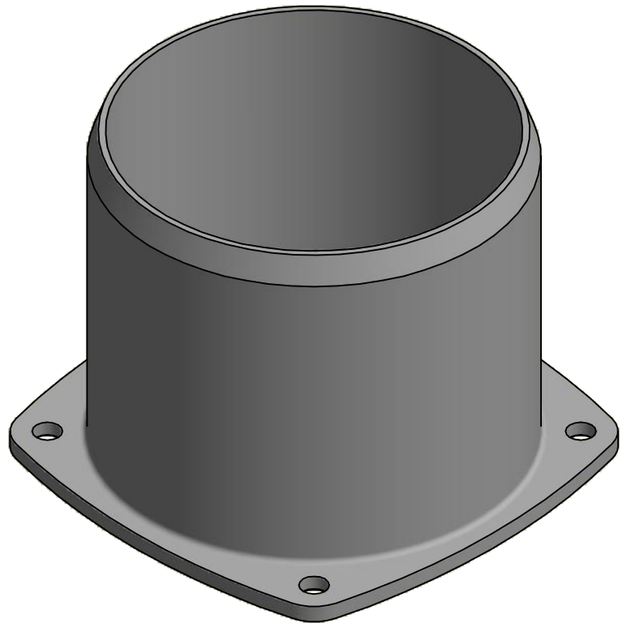

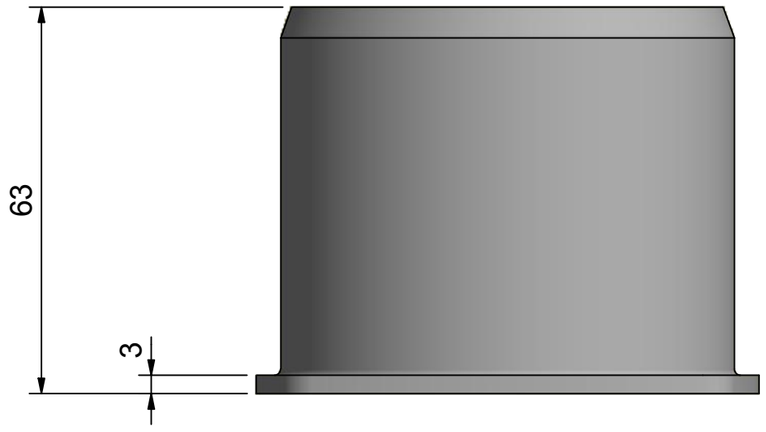

Plastic/white	Date 191001/HH
Description **Adaptor for 480970**	Item no. **480966**