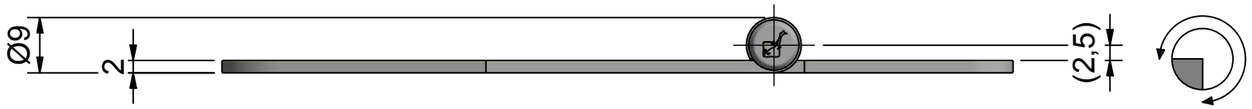

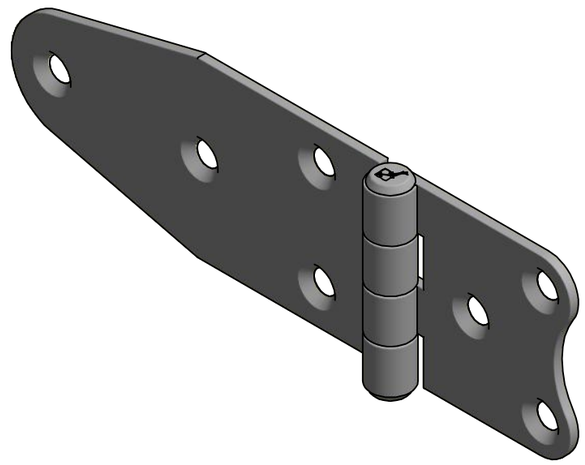

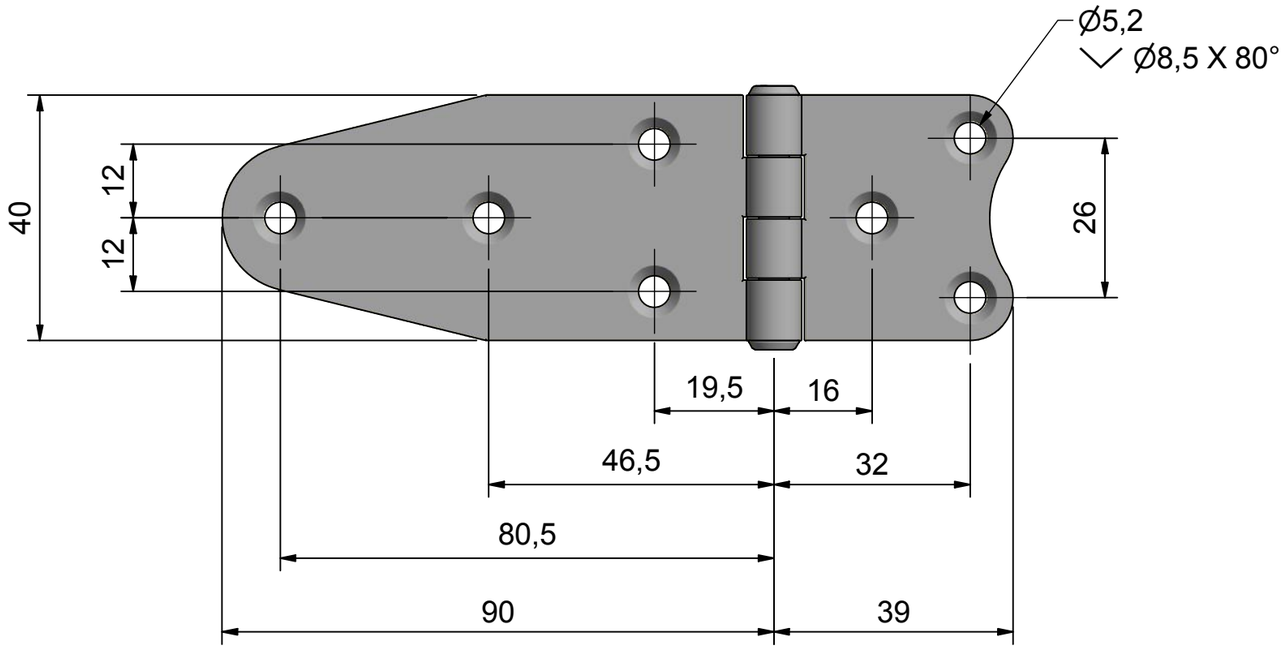

AISI316/Electro polished	Date 190923/HH
Description **Hinge 40x129**	Item no. **441610**