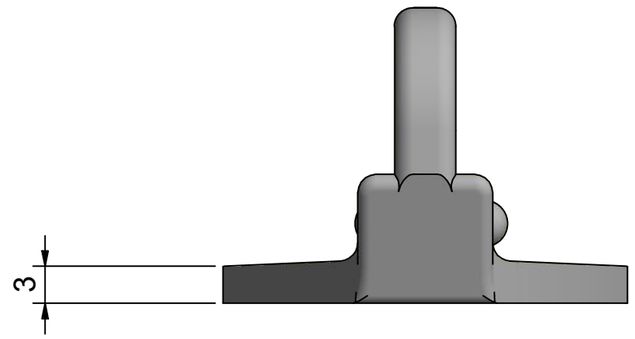

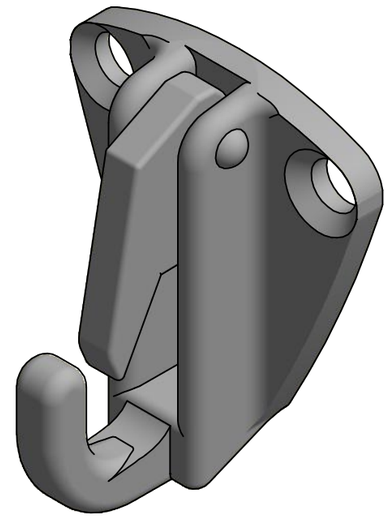

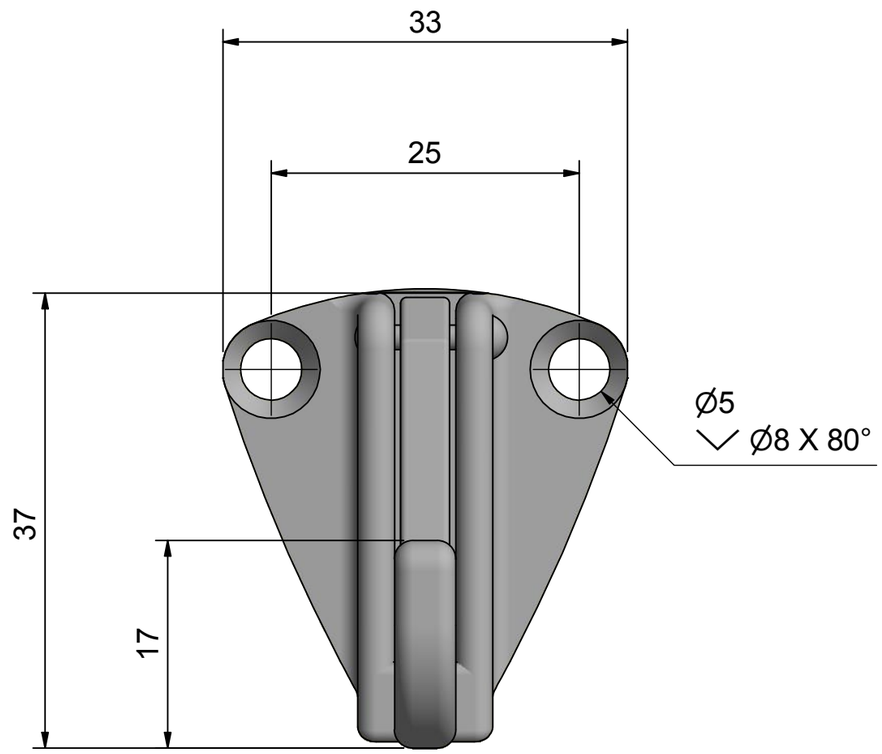

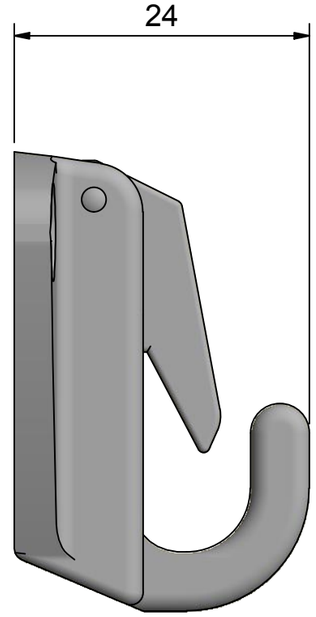

Brass/Chrome plated	Date 191017/HH
Description **Fender cleat**	Item no. **422510**